1.4 MILLION IN STOCK | ALL MAJOR BRANDS | 9,000 SIZES

High performance sealing solutions including ROTARY SHAFT SEALS

BARNWELL

THE SEAL OF APPROVAL

QUALITY AND SERVICE GUARANTEED

Total Sealing Solutions

Founded in 1972, M Barnwell Services is a family business and prides itself on providing expert industry knowledge, technical expertise, products and services to over 5000 customers globally – quickly and reliably. Our range fluid sealing products include O Rings, Oil Seals / Rotary Shaft Seals, Hydraulic and Pneumatic Seals, Gaskets, Fasteners, Sealing Kits, Special Rubber Mouldings and many more.

We aim to work in partnership with you to reduce your supplier base, inventory and long-term costs. Applying our unique product knowledge to your specific needs, we will always offer the right sealing solution for your industry and application.

M Barnwell Services range of services include:

- Stocking/Supplying a vast and diverse product range – over 35,000 stock lines
- An efficient logistical capability offering International coverage
- Industry leading bespoke Branding and Packaging technology
- Full documentation service and manufacturer guarantees
- Strategic partnerships with large Blue Chip customers and leading worldwide brands
- Seal Maker and Clean Room services that are tailor-made to the customer's needs
- A dedicated Export Department – providing sealing solutions to over 60 countries

QUALITY AND SERVICE GUARANTEED

M Barnwell Services is the UK's largest independent manufacturer, stockist, and distributor of fluid sealing products. With over 50 years' experience, we have always exceeded our customers' expectations through consistent delivery of quality, service and value.
We aim to work in partnership with our customers to provide expert industry knowledge and technical expertise, and reduce their long-term costs. By applying our unique knowledge to specific customer needs, we can offer the right sealing solution for any application and industry.

UK SERVICE NETWORK

Five distribution hubs strategically placed throughout the UK for rapid response and despatch:

- Birmingham - HQ, Central Warehouse and Export
- Bristol
- Dartford
- Glasgow
- Manchester

M Barnwell Services holds over 8 million stock items, so customers can be assured of a quick turnaround. Orders for stock items will be despatched the same day via M Barnwell Services logistics team or subcontracted to one of our reliable freight forwarders.

Non-standard items are ordered immediately and delivery scales are kept to a minimum. M Barnwell Services also have two CNC Seal Making Machines at the Birmingham headquarters. This allows M Barnwell Services to produce 'emergency' seals in less than an hour.

GLOBAL PURCHASING POWER

With over 50 years industry experience, M Barnwell Services has created partnerships with the World's leading manufacturers. This means we purchase premium quality products at the lowest price. These advantages are then passed directly onto our customers.

PURCHASING ETHOS

Purchasing ethos supports Global Aftermarket Purchasing targets with Zero Defect Ideals - as a result of the controlled and strict purchasing strategy, guaranteeing confidence with the supplier base from Quality Approved Manufacturers, with minimum criteria at ISO 9001:2015 through to Automotive, including standard IATF 16949;Q1.

SELF CERTIFICATION

With assured confidence in the supplier base and products, M Barnwell Services can self-certify items, removing the need for engineering approval. Alternatively, PSW and ISIR are standard procedures for the quality control department with PPAP from selected supplying partners.

THE UK'S LARGEST INVENTORY OF SEALING PRODUCTS

Current stock level of £5.1 million covering over 35,000 different product lines. With an agreement in place, M Barnwell Services will hold a minimum of three months' stock of your FAD requirements allowing a reduction in both lead time and minimum order quantity. This also provides the flexibility required for the best possible service levels.

MUCH MORE THAN AN O RING SUPPLIER

Buying from M Barnwell Services means more than simply sourcing the product. Our skilled staff, with over 400 years of combined experience in the fluid sealing industry are always on hand to assist you in choosing the optimum sealing products to suit your application requirements.

In order to assess the best products for a particular sealing application, or should the end user be experiencing difficulties with any sealing problems, our engineers will conduct an on-site visit and endeavour to provide a speedy solution.

DEDICATED EXPORT DEPARTMENT

In this worldwide challenging environment, our Export Service supplies to over 72 countries globally, quickly and reliably.

BARNWELL
THE SEAL OF APPROVAL

The Rotary Shaft Seal

What is it?

Referred to as an oil seal, shaft seal, lip seal, elastomeric lip seal, or any of their variations, this is a simpledevice designed to exclude contaminants such as dust, dirt, water, and to retain lubricants within rotary shaft equipment. Its primary purpose is to safeguard the bearings of rotating shafts.

This brochure attempts to spotlight a wide variety of rotary shaft seals, encompassing mechanical face seals, water pump seals, gland packings, and 'V' seals, all readily accessible.

HOW DOES IT FUNCTION?

The basic principle of sealing is simple: the flexible lip is secured against the rotating component, usually the shaft, while the casing (or outer diameter) is pressed into the housing or bore to hold the seal firmly in place. To prevent overheating, the sealing lip requires lubrication, typically energised by means of a garter spring.

ARE THERE DIFFERENT TYPES?

There are many types - far too many to list. They span a vast range of designs, sizes, and materials suitable for an large array of applications. While certain designs adhere to International Standards such as BS1399 and DIN 3760 for metric sizes and seal types, most have been manufactured to meet specific application requirements, thereby resulting in an extensive selection. This brochure's purpose is to facilitate the selection process, taking into account seal type, materials, and sizes.

HOW ARE THEY USED?

After identifying the most suitable seal, taking into consideration factors like the environment, temperature, shaft speed, pressure, lubrication availability, and size, proper storage and fitting are essential.

HOW SHOULD THEY BE ORDERED?

The simplest approach is to know either the preferred manufacturer's part number, the overall dimensions of shaft diameter, housing diameter, and bore depth, or to use this brochure to ascertain the Barnwell ordering reference.

In this era of "acquisitions," many of the traditional names of seal manufacturers have either changed or vanished. If they are no longer available, we will offer guidance and propose a suitable alternative seal from our stock whenever feasible.

For those who prioritise getting the right seals for their specific requirements, it's essential to have some knowledge about the application, as well as the overall dimensions. If any uncertainties persist, please do not hesitate to contact us; we are here to assist in your seal selection.

WHAT MATERIALS ARE AVAILABLE?

Leather likely stands as the oldest of the lip materials that are still in common use. However, the shift towards mass production methods has led to a significant surge in the development of synthetic rubbers, amenable to precise and repeatable injection and compression molding. Nitrile remains the most prevalent elastomer for standard applications, while Viton is progressively replacing Polyacrylic and Silicone for high-temperature applications. Viton also exhibits remarkable resistance to abrasion and chemical exposure, rendering it a preferred elastomer. Recent advances in utilising PTFE for rotary shaft seals have generated considerable interest, especially in cases of high-speed shaft rotation or applications with suboptimal lubrication. The bar charts on the following page serve as a reference for material selection.

STORAGE AND HANDLING

British Standard BS 3574 (1989) establishes guidelines for synthetic rubber storage, specifying that Nitrile and Polyacrylic are Group 'B' rubbers with a 7-year shelf life, while Silicone and Fluoroelastomers (Viton) are Group 'C' with a 10-year shelf life. It's crucial to store them in their original packaging, shielded from light, dust, and humidity. Synthetic rubber may be adversely affected by ozone, even produced by battery-operated forklift trucks. Also, remember to avoid hanging seals on nails or wires to protect the sealing lip.

SHAFT TOLERANCES (h11)	
SHAFT DIA. (mm)	TOLERANCE (mm)
6-10	0/-0,09
10-18	0/-0,11
18-30	0/-0,13
30-50	0/-0,16
50-80	0/-0,19
80-120	0/-0,22
120-180	0/-0,25
180-250	0/-0,29
250-315	0/-0,32

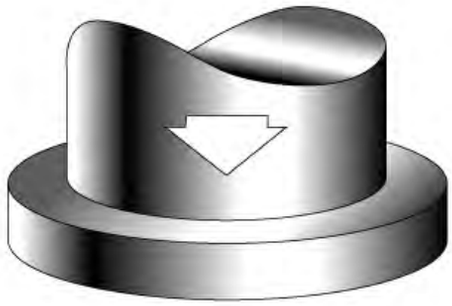

HOUSING TOLERANCES (H8)	
HOUSING DIA. (mm)	TOLERANCE (mm)
10-18	0/+0,027
18-30	0/+0,033
30-50	0/+0,039
50-80	0/+0,046
80-120	0/+0,054
120-180	0/+0,063
180-250	0/+0,072
250-315	0/+0,081

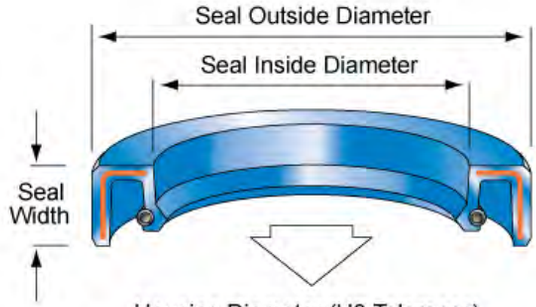

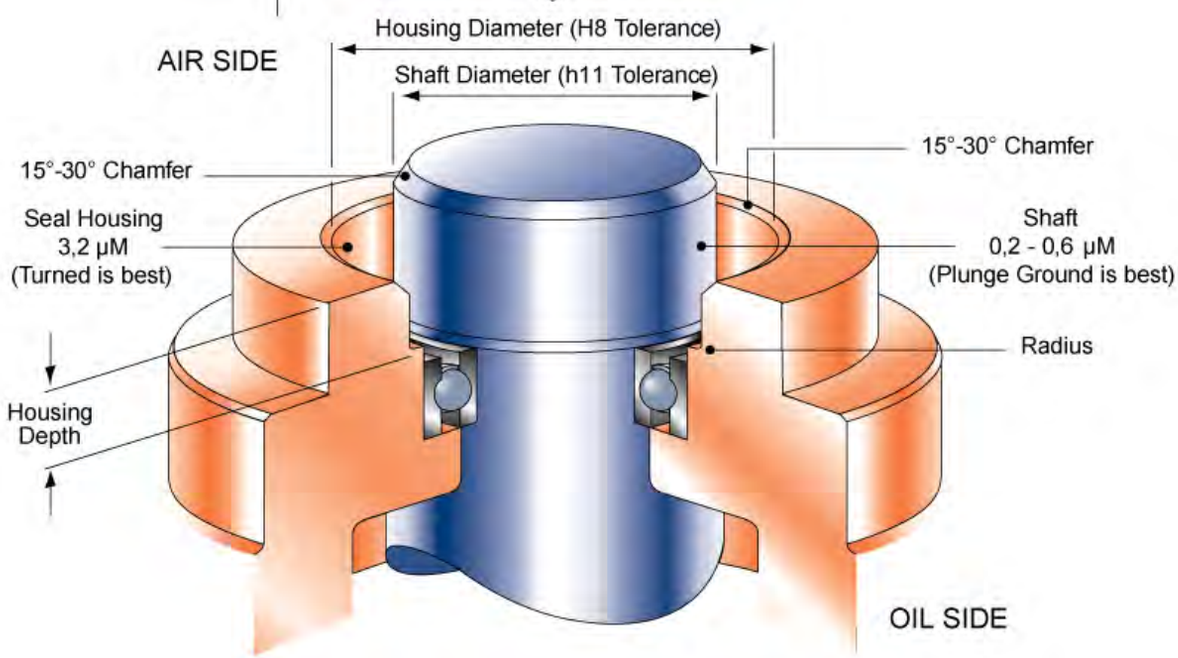

INSTALLATION

When installing the seal on original equipment, you might have some control over the quality of the shaft and housing bore finish. However, when replacing a worn seal, it's equally crucial to assess the condition of these two critical components. Be vigilant for any sharp edges or burrs, especially on the shaft and housing chamfers, as they could damage the seal during the initial operation. In case the shaft is excessively worn, consider employing a Barnwell shaft repair kit as a viable solution.

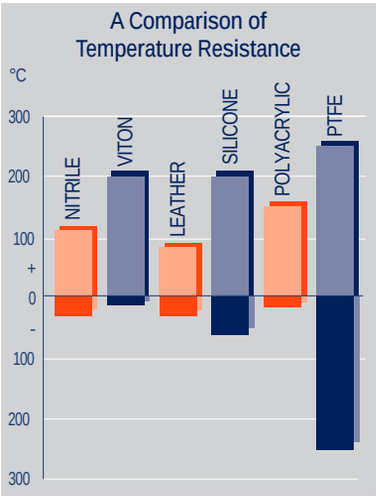

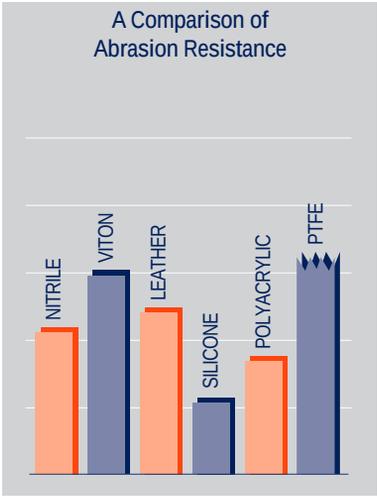

NOTE: Virgin PTFE does not have good resistance to abrasion and is generally filled with graphite, bronze or glass.

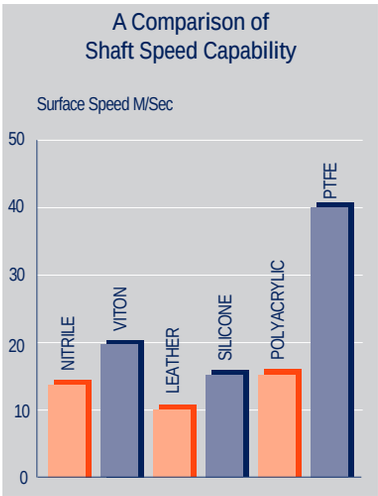

Type A

Rubber O.D., Metal Insert, Sprung Single Lip Type Shaft Seal

This design is widely favored as the most common choice for shaft seals. The rubber outer diameter allows easy replacement without causing any harm to the housing bore. Moreover, it securely holds the seal in place without requiring circlips, sealants, or a retaining plate. Please note that it is not suitable for high-pressure applications.

ALTERNATIVE STYLES IN COMMON USE

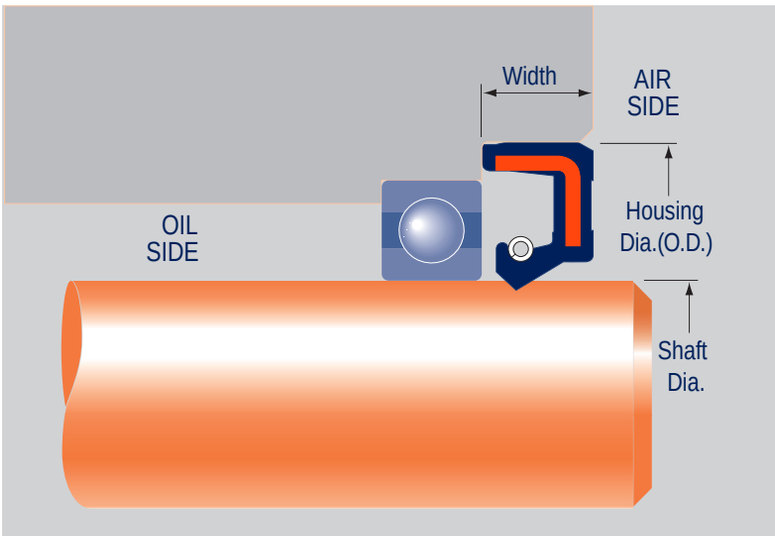

BARNWELL REFERENCE

A - O.D. x shaft x width (ins) - material

A - Shaft x O.D. x width (mm) - material

SIZE RANGE:

Shaft dias. .25” to 13.0” imp. range
4mm to 480mm metric range

PRESSURE RATING:

10 p.s.i. (0,7 Bar) max.

SHAFT SPEED:

3600 ft/min. (20m/sec)
(see chart on page 5)

MATERIALS AVAILABLE:

Nitrile, Viton, Polyacrylic, Silicone

BENEFITS OF TYPE A SEALS:

- Easy Replacement: They can be replaced without damaging the housing bore, which simplifies maintenance.
- Secure Fit: These seals retain themselves in position without needing circlips, sealants, or retaining plates.
- Cost-Effective: They are typically a cost-effective solution for sealing requirements.
- Reduced Installation Complexity: Their design simplifies the installation process, making it more user-friendly.

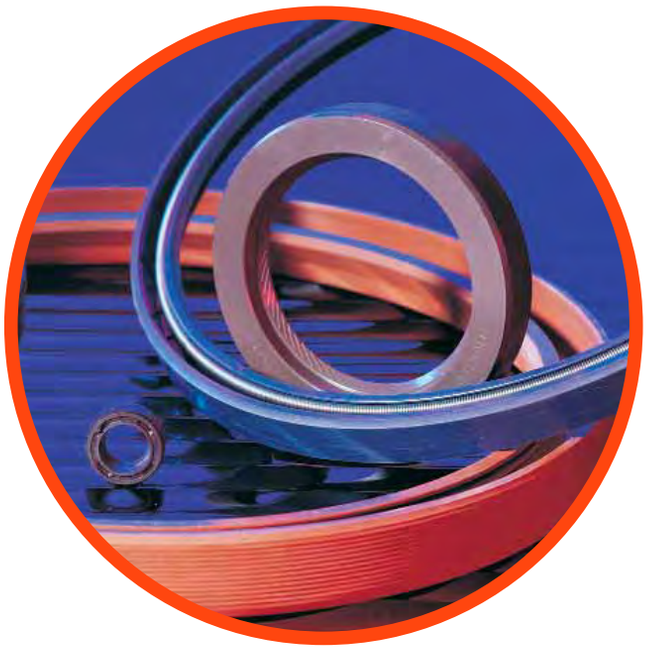

Type B

Metal O.D., Sprung Single Lip Type Shaft Seal

This choice is typically preferred when a secure housing fit is necessary, especially in heavy machinery prone to vibrations and movement. It doesn't necessitate any additional housing retention methods. However, it's advisable to avoid using this type of seal with high-temperature aluminum housings to prevent potential issues arising from thermal expansion differences.

ALTERNATIVE STYLES IN COMMON USE

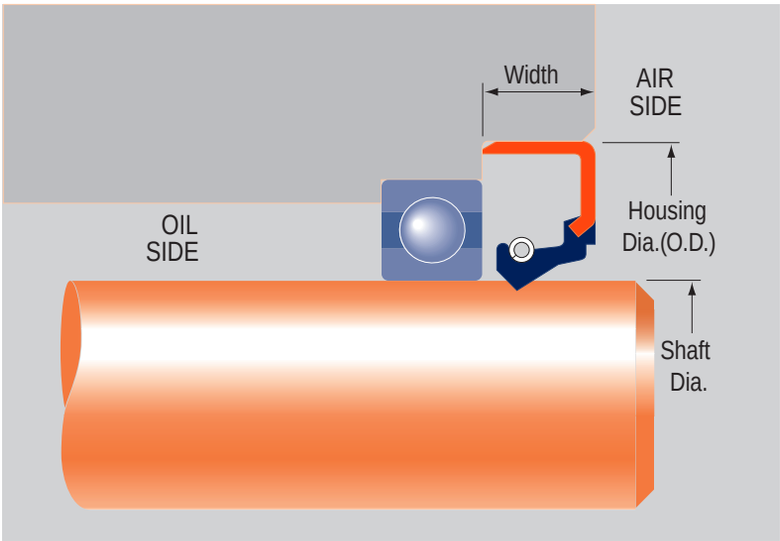

BARNWELL REFERENCE

B - O.D. x shaft x width (ins) - material

B - Shaft x O.D. x width (mm) - material

SIZE RANGE:

Shaft dias. .25” to 13.0” imp. range
4mm to 480mm metric range

PRESSURE RATING:

10 p.s.i. (0,7 Bar) max.

SHAFT SPEED:

3600 ft/min. (20m/sec)
(see chart on page 5)

MATERIALS AVAILABLE:

Nitrile, Viton, Polyacrylic, Silicone

BENEFITS OF TYPE B SEALS:

- Enhanced Sealing: Provide better sealing performance, making them suitable for applications with higher pressures.
- Extended Durability: They are more robust and can withstand greater wear and tear, increasing their lifespan.
- Reliability: Type B seals are known for their reliability in sealing tasks, reducing the risk of leaks or contamination.
- Suitable for Challenging Conditions: They are well-suited for more demanding environments.

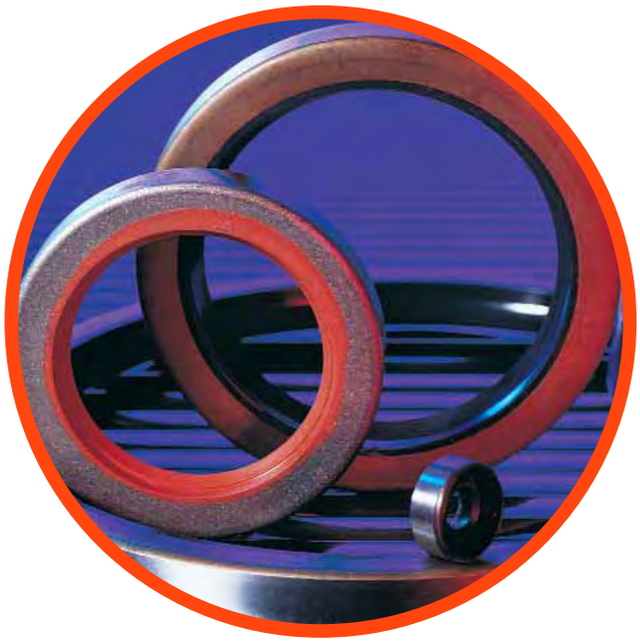

Type AS

Rubber O.D., Metal Insert, Single Spring Lip and Dirt Lip (Semi-Dual)

This design closely resembles the 'A' Type, featuring a rubber outer diameter, a metal insert, a primary lip, and an extra dirt/dust lip, sometimes referred to as a "wiper." These are typically part of the "semi-dual" lip category, specifically designed to deter dust and dirt from infiltrating the primary lip area. These seals are readily accessible in both inch and metric sizes and are offered in Nitrile, Viton, Silicone, and Polyacrylic materials, akin to the 'A' Type range.

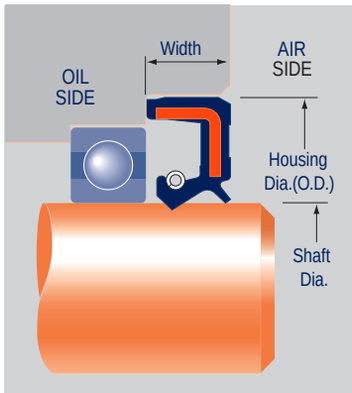

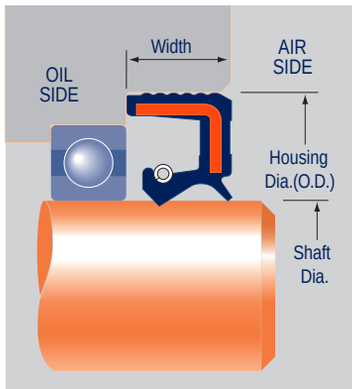

BARNWELL REFERENCE

AS - O.D. x shaft x width (ins) - material

AS - Shaft x O.D. x width (mm) - material

Type BS

Metal O.D., Single Sprung Lip and Dirt Lip (Semi-Dual)

This design closely resembles the 'B' Type, featuring a metal outer diameter (available in both ground and pressed & coated options), a primary lip, and an extra dust/dirt lip, also known as a "wiper." These are typically categorised as "semi-dual" lip seals, serving the purpose of shielding the primary lip area from dust and dirt intrusion. These seals come in both inch and metric sizes and are offered in Nitrile, Viton, Silicone, and Polyacrylic materials, similar to the 'B' Type range.

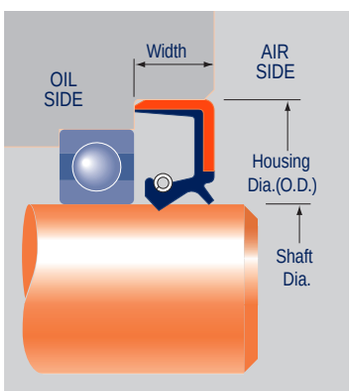

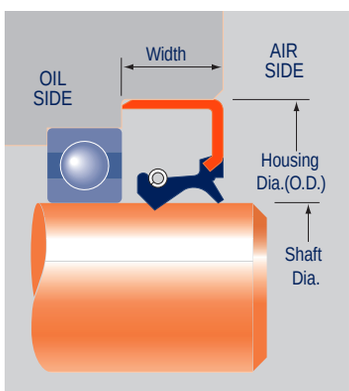

BARNWELL REFERENCE

BS - O.D. x shaft x width (ins) - material

BS - Shaft x O.D. x width (mm) - material

Type S

Totally Encased Built Up Single Lip Type

The fully metal-encased seal with a single sprung lip is an exceptionally sturdy design, especially advantageous for demanding or contaminated conditions. The added inner cup, which provides reinforcement, can also be employed in the "reverse" orientation. These seals are accessible in Nitrile, Viton, Polyacrylic, and Silicone materials, offered in both inch and metric sizes.

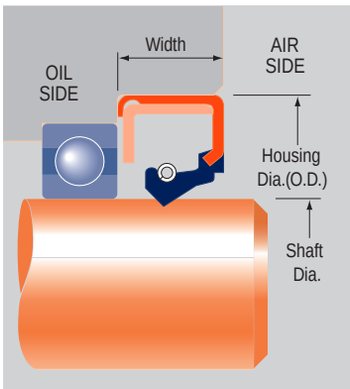

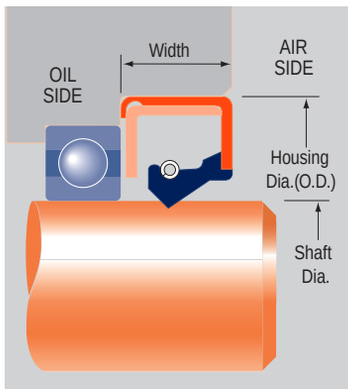

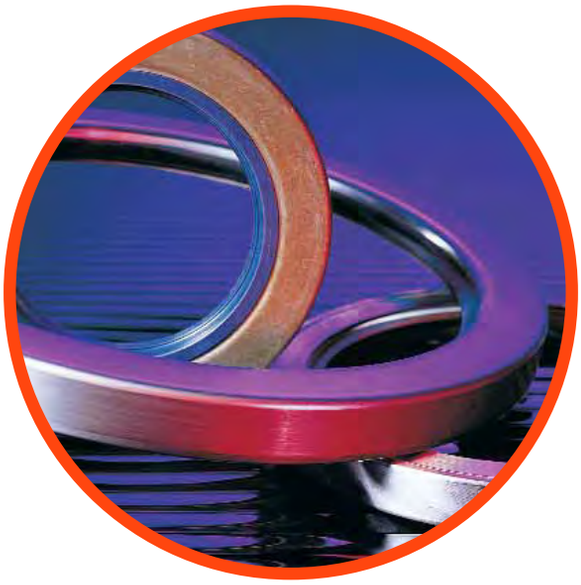

BARNWELL REFERENCE

S - O.D. x shaft x width (ins) - material

S - Shaft x O.D. x width (mm) - material

Type SAS

Built Up Semi-Dual Type

This seal closely resembles the 'S' type in its construction but boasts the advantage of featuring an extra molded dirt lip, akin to the widely used 'BS' type. It's accessible in Nitrile, Viton, Polyacrylic, and Silicone materials, with availability in both inch and metric sizes.

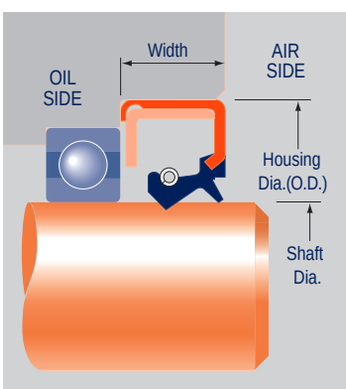

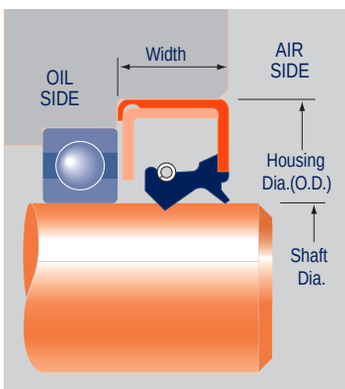

BARNWELL REFERENCE

SAS - O.D. x shaft x width (ins) - material

SAS - Shaft x O.D. x width (mm) - material

Type L

Leather

Leather seals excel in challenging, dirty, and frequently under-lubricated tasks due to their pre-lubrication and fluid-absorbing capabilities. They can endure conditions that synthetic rubber seals might struggle with in some cases.

These seals perform optimally on slower shaft speeds (200 feet per minute or 10 meters per second) and in lower temperature ranges (-30°C to +90°C). They are accessible in a diverse array of styles and sizes, available in both inch and metric measurements, with many options readily available from stock.

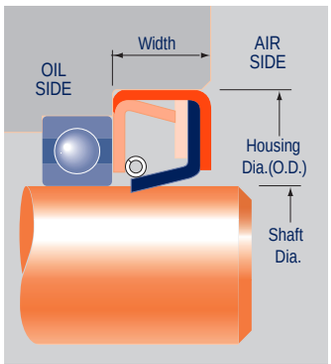

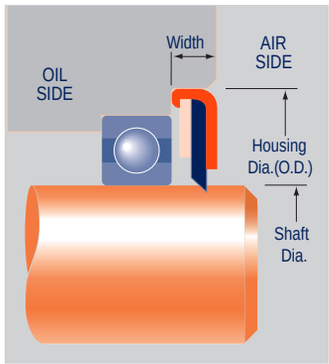

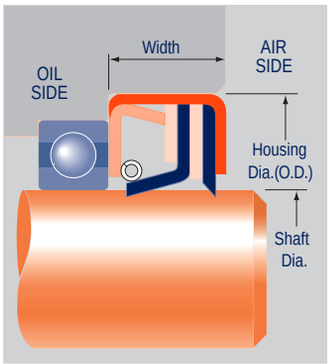

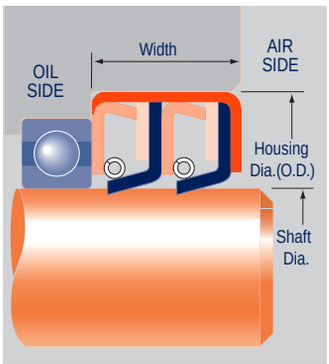

BARNWELL REFERENCE

L - O.D. x shaft x width (ins)
L - Shaft x O.D. x width (mm)

LAS - O.D. x shaft x width (ins)
LAS - Shaft x O.D. x width (mm)

BG - O.D. x shaft x width (ins)
BG - Shaft x O.D. x width (mm)

LDT - O.D. x shaft x width (ins)
LDT - Shaft x O.D. x width (mm)

BENEFITS OF TYPE L SEALS:

- Resilience: They are well-suited for challenging and dirty environments, where they can withstand conditions that synthetic rubber seals may not.
- Pre-Lubrication: These seals come pre-lubricated, which aids in their performance and longevity.
- Fluid Absorption: Type L seals can absorb and retain fluids, making them suitable for applications with inconsistent or inadequate lubrication.
- Versatility: They are effective on slower shaft speeds and operate within a range of lower temperatures.
- Wide Selection: Available in a variety of styles and sizes, both in inch and metric measurements, with many options typically in stock.

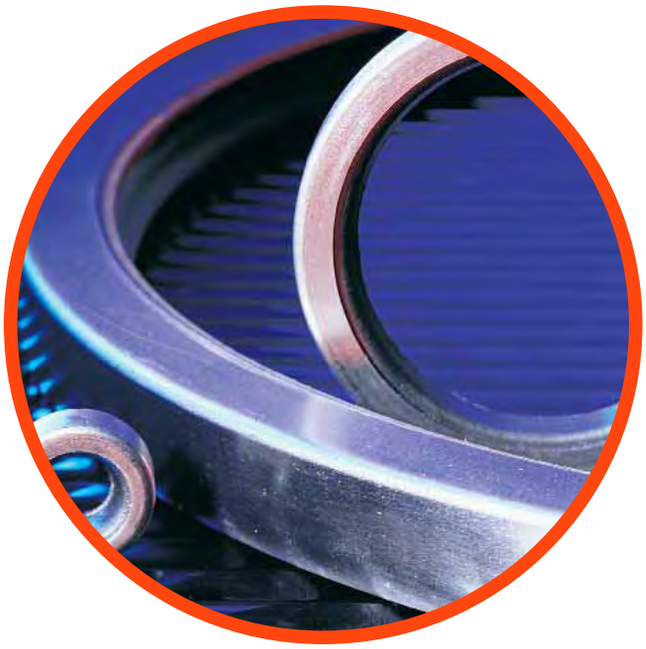

Type ABG and BG

The springless seal type is commonly employed as a grease retainer or for preventing the entry of dust or water. Typically, it finds application in lighter duties characterised by slow speeds, no significant pressure, ambient temperatures, and reliance on grease rather than oil lubrication. When the seal's lip is reversed, oriented away from the lubricant, it becomes a proficient secondary seal or wiper, effectively barring the ingress of water or other fluids such as cutting oil and coolant.

These seals are available in two variations: with a metal outer diameter (designated as BG) or with a rubber outer diameter (labeled as ABG). They are manufactured in Nitrile and Viton materials and are offered in both inch and metric sizes.

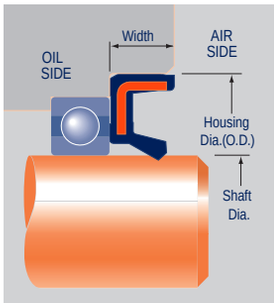

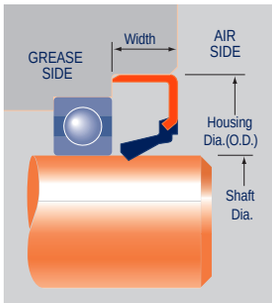

BARNWELL REFERENCE

ABG - O.D. x shaft x width (ins)
ABG - Shaft x O.D. x width (mm)
BG - O.D. x shaft x width (ins)
BG - Shaft x O.D. x width (mm)

Type EXT-R and EXT-L

External seals are typically applied in rotating hub scenarios. These seals, featuring either rubber or metal inner diameters (I.D.), are fitted onto the stationary shaft and create a seal against the bore. To ensure durability, it's essential to maintain the smoothness of the housing because the outer diameter of the seal is larger than the standard running surface (shaft). The sprung lip variant is the most commonly used, although there are springless versions and multi-grooved types occasionally found in agricultural equipment.

These seals are accessible in both inch and metric sizes and offer options with rubber or leather lips.

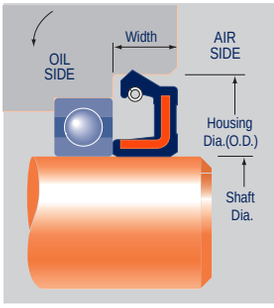

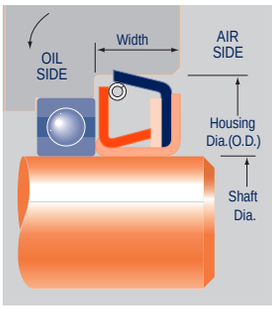

BARNWELL REFERENCE

EXT-R - O.D. x shaft x width (ins)
EXT-R - Shaft x O.D. x width (mm)
EXT-L - O.D. x shaft x width (ins)
EXT-L - Shaft x O.D. x width (mm)

Type SP

Special Designs

As custom machinery continues to evolve, the demand for "special" or "non-standard" rotary shaft seals is on the rise. What we consider "special" today is likely to become the industry standard tomorrow. These specialised seals will incorporate advanced lip materials like PTFE and other exotic synthetic elastomers. Additionally, unitised or "cassette" designs are poised to become more prevalent.

We present a selection of typical seal types that are now available in a wide array of sizes and material options. The feasibility of low and medium-sized batch production offers both buyers and designers more flexibility to implement designs that were once considered cost-prohibitive. If you have innovative ideas for sealing solutions in an ever-expanding range of applications, please don't hesitate to reach out to our engineers for further discussions.

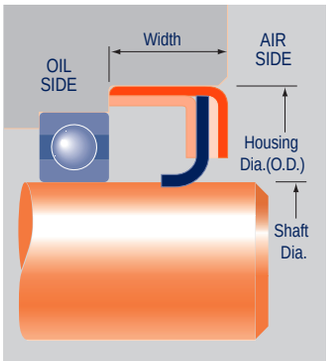

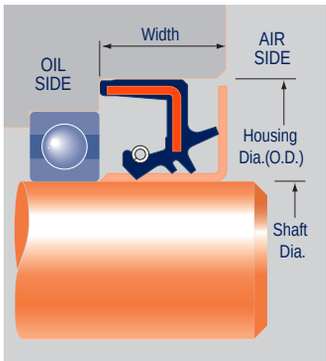

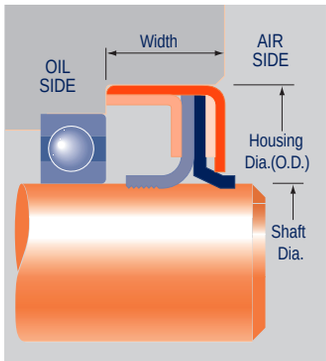

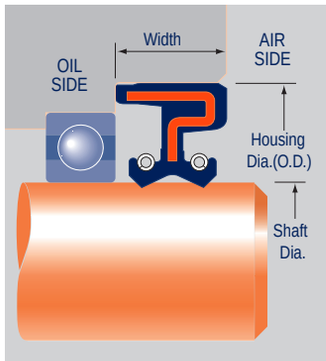

BARNWELL REFERENCE
SP- O.D. x shaft x width (ins)
SP- Shaft x O.D. x width (mm)

BENEFITS OF TYPE SP SEALS:

- Specialised Designs: Type SP seals are often custom-engineered to suit specific and evolving machinery requirements.

- Cost-Effective Production: Low and medium-sized batch production makes these seals more accessible and cost-effective for both buyers and designers.

- Advanced Material Compatibility: These seals are designed to accommodate advanced materials like PTFE and other synthetic elastomers, expanding their range of applications.

High Pressure Seals

The conventional shaft seals we've discussed are effective up to pressures of about 10 p.s.i. (0.7 Bar). When dealing with applications that exceed this pressure range, the most practical solution is to create a vent to release pressure into the atmosphere. However, in situations where this isn't feasible, such as with certain types of pumps, and investing in a mechanical seal is cost-prohibitive, there are limited options.

To address high-pressure scenarios, some measures may be necessary. The seal might need to be firmly secured within its housing to prevent "pop-out," or additional support may be required to prevent "inversion." There are specialised high-pressure seals available, but careful selection is crucial.

It's important to keep in mind that higher pressure results in increased lip contact with the shaft, which can force out lubricant and lead to elevated temperatures beneath the lip. Consequently, it's essential to maintain low shaft speeds, ensure proper shaft alignment, and have a smooth shaft surface finish, ideally plunge-ground to meet the required specifications. Additionally, proper lubrication to the sealing lip is crucial, ensuring it remains clean and well-supplied.

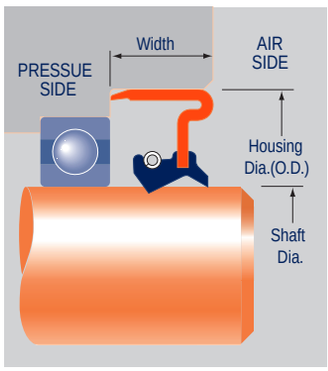

METAL O.D. PLAIN OR DUST LIP

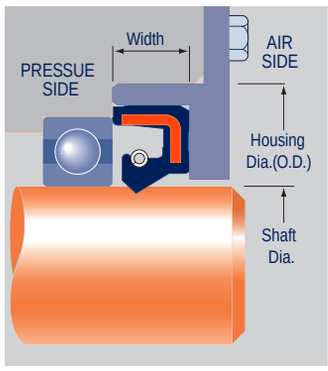

RUBBER O.D. HEAVY PLAIN LIP - RETAINED

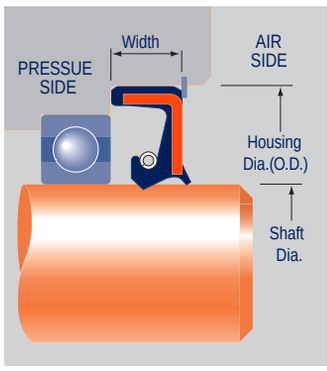

RUBBER O.D. NARROW WIDTH WITH EXT. DUST LIP - RETAINED

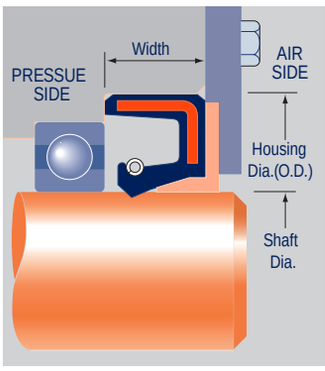

CONENTIONAL RUBBER O.D. SINGLE LIP SEAL WITH BACK-UP WASHER - RETAINED

Housings should not be oversized or too smooth if rubber O.D. seals are to be used, seal retention may be the best option.

Pressure seals are available in Nitrile , Viton and PTFE in both inch and metric sizes.

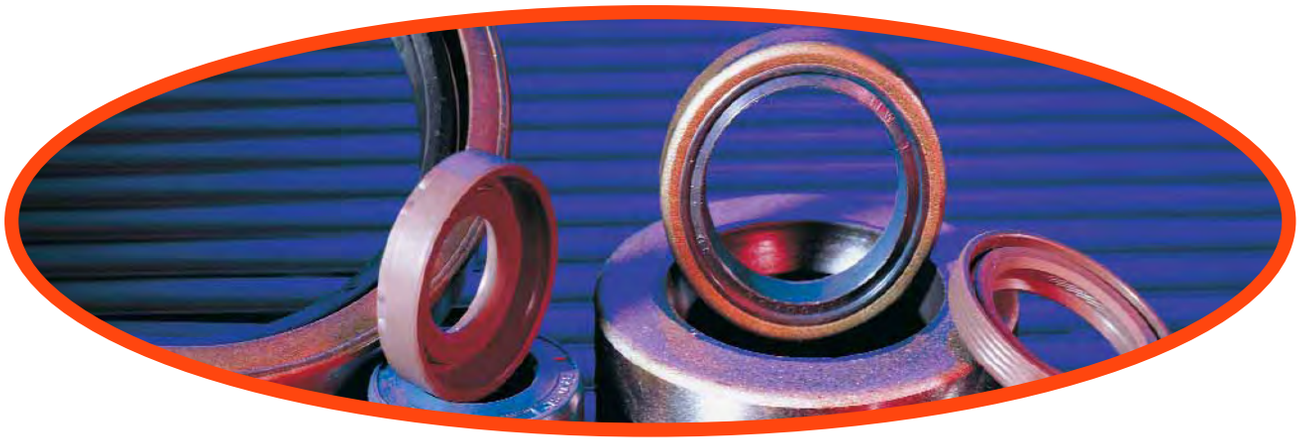

Type ADP (DPSM)

Hydrodynamic Lip

WHAT ARE HYDRODYNAMIC LIPS?

Hydrodynamic lips represent enhancements to conventional lip seals, specifically designed to boost sealing performance under challenging conditions, such as high shaft speeds, heat, vibrations, or shaft eccentricity. When traditional lip seals yield only marginally satisfactory results, it's worth considering seals equipped with this "positive action feature."

HOW DO THEY OPERATE?

The hydrodynamic feature is typically molded into the rear face of the sealing lip, also known as the "Air Side." Various designs, often patented, are favored by leading oil seal manufacturers. The most common versions include molded helixes, but it's essential to use them carefully as they are "uni-directional" and may promote leakage if used in the wrong direction of rotation. Safer designs are the "bi-directional" features, which appear as molded ribs, waves, double helixes, and triangular pads. These designs claim to assist in pumping lubricant or other sealed fluids from beneath the lip back into the machinery or sump. During the development of these features, care is taken to avoid "over-pumping," which could not only draw in the oil film but also other fluids or foreign particles.

Hydrodynamic or Positive Action lips have been in use for over 35 years in various forms and are widely available as standard in metric sizes. They are also offered in a limited range of inch sizes, typically crafted from Nitrile and Viton materials.

HOW TO INSTALL THEM

The installation process is identical to that of plain lip seals. Lubricate both the outer diameter (O.D.) and inner diameter (I.D.) lip with clean oil or the sealed fluid, and install as previously instructed, with the garter spring oriented toward the bearings (into the oil).

DIFFERENTIATING RIBBED O.D. SEALS:

It's important to note that there is an increasing use of ribbed or semi-ribbed rubber O.D. seals. These are not hydrodynamic features but rather seal retainers. They are particularly beneficial when dealing with aluminum housings or situations where high thermal expansion might be a concern.

HOW TO PLACE ORDERS:

The most common seal of this type is the Spiroseal, available in the full standard metric range, crafted from Nitrile and Viton materials. It features a plain rubber O.D., metal insert, and a single sprung lip. When placing orders, refer to the Barnwell ordering reference, which is ADP (see listing).

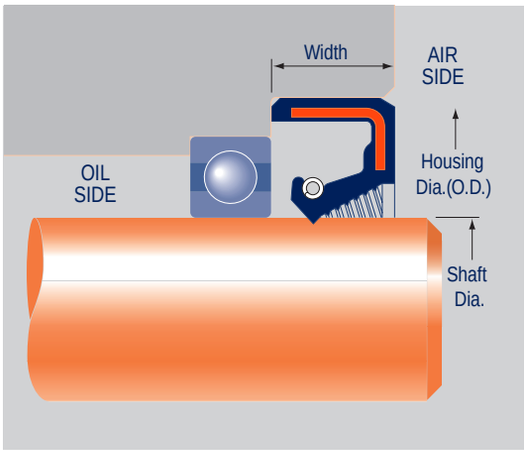

OTHER HYDRODYNAMIC FEATURES

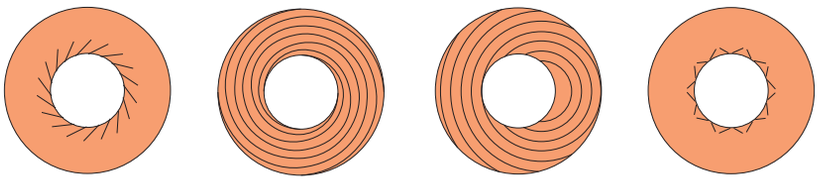

BARNWELL REFERENCE

ADP - O.D. x shaft x width (ins)

Size Listing (INCH)

A	B	AS	BS	S	L	ABG/BG
						

Shaft Dia.	Housing Dia. (O.D.)	Width Range	Shaft Dia.	Housing Dia. (O.D.)	Width Range	Shaft Dia.	Housing Dia. (O.D.)	Width Range
0·250	0·750	·25-·375	0·812	1·375	·125-·375	1·250	1·500	·125-·500
0·312	0·750	"	0·875	1·250	"	1·250	1·625	·187-·500
0·312	0·875	"	0·875	1·375	"	1·250	1·687	"
0·375	0·750	"	0·875	1·500	"	1·250	1·750	"
0·375	0·875	"	0·875	1·625	"	1·250	1·812	"
0·375	1·000	"	0·875	1·750	·125-·500	1·250	1·875	"
0·437	0·875	"	0·937	1·500	"	1·250	2·000	"
0·437	1·000	"	0·937	1·625	"	1·250	2·062	"
0·437	1·125	"	0·937	1·750	"	1·250	2·125	"
0·500	0·875	"	1·000	1·250	"	1·250	2·187	"
0·500	1·000	"	1·000	1·375	"	1·250	2·250	"
0·500	1·125	"	1·000	1·437	"	1·250	2·375	"
0·562	1·000	"	1·000	1·500	"	1·312	1·875	"
0·562	1·125	"	1·000	1·562	"	1·312	2·000	"
0·562	1·250	"	1·000	1·625	"	1·312	2·125	"
0·625	0·937	"	1·000	1·750	"	1·375	1·875	"
0·625	1·000	"	1·000	1·875	"	1·375	2·000	"
0·625	1·125	"	1·000	1·937	"	1·375	2·062	"
0·625	1·250	"	1·000	2·000	"	1·375	2·125	"
0·625	1·312	"	1·062	1·500	"	1·375	2·250	"
0·625	1·375	"	1·062	1·625	"	1·375	2·375	"
0·625	1·500	"	1·062	1·750	"	1·375	2·500	"
0·650	1·500	"	1·062	1·875	"	1·437	2·125	"
0·687	1·062	"	1·062	2·000	"	1·437	2·250	"
0·687	1·125	"	1·125	1·500	"	1·437	2·500	"
0·687	1·250	"	1·125	1·562	"	1·500	1·875	"
0·687	1·375	"	1·125	1·625	"	1·500	2·000	"
0.750	1·000	"	1·125	1·750	"	1·500	2·062	"
0.750	1·125	"	1·125	1·875	"	1·500	2·125	"
0.750	1·187	"	1·125	2·000	"	1·500	2·187	"
0.750	1·250	"	1·125	2·250	"	1·500	2·250	"
0.750	1·375	"	1·187	1·500	"	1·500	2·375	"
0.750	1·500	"	1·187	1·750	"	1·500	2·500	"
0.750	1·625	"	1·187	2·000	"	1·500	2·750	"
0·812	1·187	"	1·187	2·250	"	1·562	2·250	"

Size Listing (INCH)

A	B	AS	BS	S	L	ABG/BG
						

Shaft Dia.	Housing Dia. (O.D.)	Width Range	Shaft Dia.	Housing Dia. (O.D.)	Width Range	Shaft Dia.	Housing Dia. (O.D.)	Width Range
1·562	2·375	·187-·500	1·875	3·000	·250-·500	2·500	3·000	·250-·625
1·562	2·437	"	1·875	3·187	"	2·500	3·062	"
1·562	2·500	"	1·937	2·500	·250-·625	2·500	3·250	"
1·562	2·687	"	1·937	2·750	"	2·500	3·375	"
1·625	2·125	"	1·937	3·000	"	2·500	3·500	"
1·625	2·187	·250-·500	2·000	2·500	"	2·500	3·543	"
1·625	2·250	"	2·000	2·625	"	2·500	3·625	"
1·625	2·375	"	2·000	2·687	"	2·500	3·750	"
1·625	2·437	"	2·000	2·750	"	2·500	3·875	"
1·625	2·500	"	2·000	2·875	"	2·562	3·375	"
1·625	2·562	"	2·000	3·000	"	2·625	3·375	"
1·625	2·625	"	2·000	3·125	"	2·625	3·500	"
1·625	2·750	"	2·062	2·875	"	2·625	3·625	"
1·625	2·875	"	2·062	3·000	"	2·625	3·750	"
1·687	2·187	"	2·125	2·750	"	2·687	3·500	"
1·687	2·500	"	2·125	2·875	"	2·750	3·500	"
1·687	2·687	"	2·125	3·000	"	2·750	3·625	"
1·687	2·750	"	2·125	3·187	"	2·750	3·750	"
1·750	2·125	"	2·125	3·250	"	2·750	3·875	"
1·750	2·250	"	2·125	3·500	"	2·750	4·000	"
1·750	2·375	"	2·187	3·000	"	2·812	3·625	"
1·750	2·437	"	2·250	2·875	"	2·875	3·625	"
1·750	2·500	"	2·250	3·000	"	2·875	3·750	"
1·750	2·625	"	2·250	3·125	"	2·875	3·875	"
1·750	2·687	"	2·250	3·187	"	2·875	4·000	"
1·750	2·750	"	2·250	3·250	"	2·875	4·500	"
1·750	2·875	"	2·250	3·375	"	2·937	3·750	"
1·750	3·000	"	2·312	3·125	"	3·000	3·750	"
1·812	2·500	"	2·375	3·000	"	3·000	3·875	"
1·812	2·625	"	2·375	3·125	"	3·000	4·000	·375-·625
1·875	2·500	"	2·375	3·250	"	3·000	4·125	"
1·875	2·625	"	2·375	3·375	"	3·000	4·375	"
1·875	2·687	"	2·375	3·500	"	3·000	4·500	"
1·875	2·750	"	2·437	3·250	"	3·062	4·125	"
1·875	2·875	"	2·437	3·500	"	3·125	4·000	"

Size Listing (INCH)

A	B	AS	BS	S	L	ABG/BG
						

Shaft Dia.	Housing Dia. (O.D.)	Width Range	Shaft Dia.	Housing Dia. (O.D.)	Width Range	Shaft Dia.	Housing Dia. (O.D.)	Width Range
3·125	4·125	·375-·625	3·625	5.250	375-·750	4·250	5·375	"
3·125	4·250	"	3·687	4·750	"	4·250	5·500	"
3·125	4·500	"	3·687	4·875	"	4·250	5·625	"
3·125	4·750	"	3·687	5·000	"	4·250	5·750	"
3·187	4·250	"	3·687	5·125	"	4·250	6·000	"
3·250	4·000	"	3·687	5·625	"	4·312	5·375	"
3·250	4·250	·250-·625	3·750	4·500	"	4·375	5·375	"
3·250	4·500	·375-·625	3·750	4·625	"	4·375	6·000	"
3·250	4·750	"	3·750	4·750	"	4·437	5·500	"
3·250	4·875	"	3·750	5·000	"	4·500	5·250	"
3·312	4·375	"	3·750	5·250	"	4·500	5·375	"
3·375	4·125	"	3·812	4·875	"	4·500	5·500	"
3·375	4·375	"	3·875	4·750	"	4·500	5·750	"
3·375	4·500	"	3·875	4·875	"	4·500	6·000	"
3·375	4·625	"	3·875	5·000	"	4·500	6·250	"
3·375	4·750	"	3·875	5·125	"	4·500	6·375	"
3·375	5·000	"	3·875	5·375	"	4·562	5·625	"
3·375	5·250	"	3·875	5·687	"	4·625	5·625	"
3·437	4·250	"	3·937	5·000	"	4·625	6·000	"
3·437	4·500	"	4·000	4·750	"	4·687	5·750	"
3·437	4·750	"	4·000	4·875	"	4·687	6·250	"
3·500	4·125	"	4·000	5·000	"	4·750	5·500	"
3·500	4·375	"	4·000	5·125	"	4·750	5·750	"
3·500	4·500	"	4·000	5·250	"	4·750	6·000	"
3·500	4·750	"	4·000	5·375	"	4·750	6·250	"
3·500	5·000	·375-·750	4·000	5·500	"	4·812	5·875	"
3·500	5·125	"	4·000	5·750	"	4·875	5·875	"
3·500	5·250	"	4·062	5·125	"	4·875	6·250	"
3·500	5·375	"	4·125	5·000	"	4·937	6·000	"
3·562	4·625	"	4·125	5·125	"	5·000	5·750	"
3·625	4·500	"	4·187	5·000	"	5·000	6·000	"
3·625	4·625	"	4·187	5·250	"	5·000	6·250	"
3·625	4·750	"	4·187	5·750	"	5·000	6·500	"
3·625	4·875	"	4·250	5·000	"	5·000	6·750	"
3·625	5·000	"	4·250	5·000	"	5·062	6·125	"

Size Listing (INCH)

A	B	AS	BS	S	L	ABG/BG
						

Shaft Dia.	Housing Dia. (O.D.)	Width Range
5·125	6·125	·375-·750
5·125	6·250	"
5·125	6·375	"
5·187	5·937	"
5·187	6·250	"
5·250	6·000	"
5·250	6·250	"
5·250	6·500	"
5·250	6·750	·375-·875
5·312	6·375	"
5·375	6·250	"
5·375	6·375	"
5·437	6·500	"
5·500	6·250	"
5·500	6·500	"
5·500	6·750	"
5·500	7·000	"
5·625	6·625	"
5·625	6·375	"
5·625	6·500	"
5·625	6·625	"
5·625	6·750	"
5·625	7·000	"
5·687	6·750	"
5·750	6·750	"
5·750	6·875	"
5·750	7·000	"
5·750	7·500	"
5·875	6·875	"
5·937	7·000	"
6·000	7·000	"
6·000	7·187	"
6·000	7·250	"
6·000	7·500	"
6·062	7·125	"

Shaft Dia.	Housing Dia. (O.D.)	Width Range
6·125	7·125	·375-·875
6·187	7·250	"
6·250	7·000	"
6·250	7·187	"
6·250	7·250	"
6·250	7·500	"
6·312	7·375	"
6·375	7·375	"
6·437	7·500	"
6·500	7·500	"
6·500	7·750	"
6·500	8·000	"
6·500	8·250	"
6·562	7·625	"
6·625	7·500	"
6·625	7·625	"
6·687	7·500	"
6·750	7·750	"
6·750	8·000	"
6·750	8·250	"
6·750	8·500	"
7·000	8·000	"
7·000	8·125	"
7·000	8·250	"
7·000	8·500	"
7·125	8·625	"
7·250	8·500	"
7·250	8·750	"
7·375	8·875	"
7·500	9·000	"
7·625	9·125	"
7·625	9·500	"
7·750	8·750	"
7·750	9·000	"
7·750	9·250	"

Shaft Dia.	Housing Dia. (O.D.)	Width Range
7·875	9·375	·375-·875
8·000	9·500	"
8·000	10·000	·500-1·000
8·250	9·750	"
8·250	10·000	"
8·375	9·875	"
8·500	10·000	"
8·500	10·500	"
8·625	10·125	"
8·750	10·250	"
8·750	10·500	"
8·875	10·375	"
9·000	10·000	"
9·000	10·500	"
9·250	10·750	"
9·500	11·000	"
9·625	11·125	"
9·750	11·125	"
10·000	11·500	"
10·250	12·000	"
10·500	12·000	"
10·750	11·500	"
11·000	12·250	·625-1·250
11·500	13·000	"
11·500	13·500	"
12·000	13·000	"
12·000	14·000	"
12·250	14·750	"
13·000	15·000	"

Size Listing (METRIC)

A	B	AS	BS	S	*ADP	L	ABG/BG
							

Shaft Dia.	Housing Dia. (O.D.)	Width Range	Shaft Dia.	Housing Dia. (O.D.)	Width Range	Shaft Dia.	Housing Dia. (O.D.)	Width Range
4	8	2	12	19	3	17	30	7-10
4	11	6	*12	22	4-8	*17	32	6-10
4	12	6	*12	24	6-7	17	34	4
5	9	2	12	25	5-8	*17	35	6-10
5	10	2	12	26	7-8	*17	40	6-10
5	15	6	*12	28	7	17	47	7-10
5	16	7	*12	30	7-10	18	24	3-4
5	22	8	12	32	5-10	18	26	4-6
6	10	2	13	19	3	18	28	7-8
6	12	2	13	26	5-7	*18	30	7-8
*6	16	4-7	13	30	7-10	*18	32	7-8
6	19	6-7	14	20	3	*18	35	7-10
*6	22	7-8	14	22	3-4	*18	40	7-10
7	11	2	*14	24	6-7	19	27	4-6
7	14	2-4	14	25	5-7	19	30	5-8
*7	16	4-7	14	26	7	19	32	6-10
*7	22	6-7	*14	28	7	19	35	6-10
8	12	3	*14	30	7-10	19	40	6-10
8	15	3	14	32	7-10	19	26	4
*8	16	5-7	*14	35	7-10	20	28	4-6
8	18	5-7	15	21	3-4	*20	30	5-10
8	20	7-8	15	23	3	*20	32	5-10
*8	22	6-8	*15	24	5-7	20	33	8-10
*8	24	7	15	25	5-7	*20	35	6-10
9	13	3	*15	26	4-7	20	36	7
9	16	3	15	28	6-9	20	37	6-10
*9	22	7-10	*15	30	4-10	20	38	7-10
*9	24	7	*15	32	5-10	*20	40	6-10
*9	26	7	*15	35	5-10	20	42	6-10
10	14	3	15	40	7-10	20	45	7-10
10	16	4-7	16	22	3-4	*20	47	7-10
10	17	3-5	16	24	3-7	20	52	7-10
10	18	5-7	16	25	3	21	29	4
*10	19	7	*16	28	6-7	22	28	4-5
*10	22	7-8	*16	30	6-10	22	30	4
*10	24	7	*16	32	7-10	*22	32	6-7
*10	26	7	*16	35	7-10	*22	35	6-10
11	17	4	16	40	7-10	22	38	7-8
*11	22	7-8	17	23	3	*22	40	7-12
*11	26	7	17	25	3-4	22	42	7-10
12	16	3	17	26	6	22	45	7-8
12	18	3	*17	28	6-7	*22	47	7-10

*Sizes available in Type ADP

Size Listing (METRIC)

A	B	AS	BS	S	*ADP	L	ABG/BG
							

Shaft Dia.	Housing Dia. (O.D.)	Width Range	Shaft Dia.	Housing Dia. (O.D.)	Width Range	Shaft Dia.	Housing Dia. (O.D.)	Width Range
22	50	8-10	28	50	7-10	35	58	8-13
23	40	8-10	*28	52	7-12	35	60	8-12
24	32	4	28	62	9-12	*35	62	5-12
*24	35	7	29	38	4	35	65	8-12
24	36	6-10	30	37	4	35	72	8-12
*24	37	7	*30	40	4-10	35	80	8-13
*24	40	7-10	*30	42	5-10	*36	47	7
24	45	8	30	44	7-10	*36	50	6-10
*24	47	7-10	30	45	7-10	*36	52	7-10
24	32	8-10	*30	47	6-10	36	54	7-8
25	32	4	30	48	8-10	36	56	10-12
25	33	4-6	*30	50	7-12	36	58	8-10
*25	35	4-8	*30	52	7-12	*36	62	7-12
25	36	7	30	55	7-12	36	68	8-10
25	37	5-8	30	56	8-15	37	47	4-8
25	38	6-7	30	60	8-10	37	50	10
*25	40	5-10	*30	62	6-12	37	62	7-12
*25	42	6-12	31	72	8-10	38	48	4
25	45	7-10	32	47	7-10	*38	50	7
25	46	6-8	32	42	4-8	*38	52	6-10
*25	47	6-10	*32	45	4-8	38	54	6-10
25	50	8-12	*32	47	7-12	*38	55	7-12
*25	52	7-12	32	50	7-12	38	56	8-12
25	62	7-12	*32	52	5-12	38	60	8-10
26	34	4	32	55	8-12	*38	62	7-12
26	35	7	32	56	8-12	38	65	8-12
*26	37	7	33	45	7	38	72	8-12
26	40	8-10	33	50	6-10	40	47	4
*26	42	7-10	33	52	6-10	40	50	4-8
*26	47	7-10	34	45	7	*40	52	5-12
26	52	8-12	34	46	8-10	*40	55	6-12
27	37	7	34	50	8-10	40	56	8-12
27	41	8-10	34	52	7-10	40	58	8-12
27	47	6-11	34	58	10-13	40	60	7-13
27	50	8-12	34	62	8-10	*40	62	7-12
28	35	4	35	42	4	40	65	8-12
28	37	4	35	45	4-8	40	68	6-12
*28	38	7	*35	47	5-10	40	70	8-12
*28	40	7-10	*35	50	7-12	*40	72	7-12
28	42	7-10	*35	52	7-12	40	80	8-13
*28	47	5-10	35	55	6-12	41	62	8-10
28	48	8-10	35	56	8-12	42	52	4-8

*Sizes available in Type ADP

Size Listing (METRIC)

A	B	AS	BS	S	*ADP	L	ABG/BG
							

Shaft Dia.	Housing Dia. (O.D.)	Width Range	Shaft Dia.	Housing Dia. (O.D.)	Width Range	Shaft Dia.	Housing Dia. (O.D.)	Width Range
*42	55	6-9	50	72	8-12	60	110	8-13
42	56	7-8	50	75	8-12	61	75	8
42	58	7-10	50	78	8-13	62	75	10-13
42	60	7-12	*50	80	8-13	62	80	8-12
*42	62	6-12	50	85	6-13	*62	85	8-13
42	65	8-12	50	90	8-13	*62	90	8-13
*42	72	8-12	51	72	10	*62	100	10-13
43	53	4	*52	68	7-12	*63	85	8-13
43	60	8-10	*52	69	10-12	63	88	8-10
43	75	10	*52	72	8-12	*63	90	8-12
44	60	8-12	*52	80	10-13	64	80	8-13
44	62	8-12	52	85	8-13	64	85	10-13
44	65	8-10	53	68	10	64	90	10-13
44	72	8-12	54	80	10-13	65	80	8
45	52	4	54	85	10-15	*65	85	8-13
45	55	4-8	55	68	8	*65	90	8-15
45	58	7-9	*55	70	8-10	*65	100	8-13
*45	60	7-12	*55	72	8-12	66	90	10-13
*45	62	7-12	55	75	8-12	67	80	10
*45	65	8-12	55	78	9-13	67	85	10
45	68	8-12	*55	80	8-13	68	85	8-10
45	70	8-12	*55	85	8-13	*68	90	8-13
*45	72	7-12	55	90	8-13	*68	100	10-12
45	75	6-12	56	70	8	*70	85	7-8
45	78	10-13	56	72	7-10	*70	90	7-13
45	80	8-13	*56	80	8-13	70	92	11
45	85	8-13	*56	85	8-10	70	95	10-13
46	65	8-10	57	90	13	*70	100	6-13
46	72	8-10	*58	72	8-10	70	105	10-13
47	65	8-12	58	75	8-12	70	110	8-13
47	72	8-12	58	78	8-13	72	84	7
*48	62	7-10	*58	80	8-13	72	90	8-13
48	65	7-12	58	85	8-13	*72	95	10-13
48	68	8-12	58	90	8-13	*72	100	10-13
48	70	8-12	60	72	8	75	90	8-12
*48	72	7-12	*60	75	8	*75	95	8-13
48	80	8-13	60	78	9-13	*75	100	10-13
50	58	4	*60	80	7-13	75	105	10-13
50	62	5-10	*60	85	8-13	75	110	10-13
*50	65	7-10	*60	90	8-13	*78	100	10-13
*50	68	8-14	60	95	10-13	78	110	10-13
*50	70	8-14	60	100	10	*80	100	10-13

*Sizes available in Type ADP

Size Listing (METRIC)

A	B	AS	BS	S	*ADP	L	ABG/BG
							

Shaft Dia.	Housing Dia. (O.D.)	Width Range	Shaft Dia.	Housing Dia. (O.D.)	Width Range	Shaft Dia.	Housing Dia. (O.D.)	Width Range
80	105	10-13	110	150	12-15	175	200	15
*80	110	10-13	112	140	9-13	175	215	16
80	120	10-13	115	135	12-13	180	200	15
80	125	10-13	*115	140	12-15	*180	210	15
82	105	12-13	*115	150	12-15	180	215	15-16
82	110	12-13	118	150	15	180	220	15-16
84	110	12	120	140	7-13	185	210	13
*85	100	9-13	*120	150	12-15	190	215	15-16
85	105	10-13	*120	160	12-15	*190	220	15-16
85	110	10-15	122	150	13-15	190	230	16
85	115	12-13	*125	150	12-15	*200	230	15-16
*85	120	10-15	*125	160	12-15	200	250	15
85	130	10-13	128	150	13-15	205	230	15-16
87	110	13	*130	160	12-15	*210	240	15
88	110	10-13	*130	170	12-15	210	250	15-20
88	115	12	132	160	13-15	215	240	12
*90	110	8-15	135	160	12-15	218	250	16
90	115	9-13	135	165	12-15	*220	250	11-16
90	120	12-15	*135	170	12-15	*230	260	15
90	130	12-13	140	160	12-15	230	270	15-16
92	120	12-13	140	165	15	230	280	15-16
95	110	9-12	*140	170	12-15	*240	270	15-16
95	115	12-13	140	180	15	240	280	15-16
*95	120	12-15	145	165	13-15	*250	280	15-16
*95	125	10-15	145	170	13-15	260	290	16
*95	130	12-13	*145	175	13-15	260	300	16-20
98	120	12-14	145	180	13-15	280	310	15-16
98	125	13	150	170	15	280	320	18-20
98	128	10	*150	180	12-15	300	340	16-20
100	115	9	150	190	12-15	310	350	18
*100	120	8-15	155	174	12	320	360	18-20
*100	125	12-15	155	180	15	340	372	16
*100	130	10-15	155	190	13-15	340	380	18-20
100	140	12-13	160	180	15	350	380	16
100	150	12-13	160	185	10	360	400	18-20
104	125	10-12	*160	190	13-15	370	410	15-18
105	125	12-13	160	200	12-15	380	420	20
*105	130	12-15	165	190	13-15	390	430	16-18
*105	140	12-15	165	200	15	400	440	20
110	128	9	170	190	13-15	420	460	20
*110	130	12-15	*170	200	12-15	440	480	20
*110	140	12-15	170	215	16	480	520	20

*Sizes available in Type ADP

Type SPS Seals

SPS Seals are constructed from solid rubber or a blend of rubber and reinforced fabric. They offer a range of garter springs to match your specific application. These seals are available in sizes suitable for shafts measuring 3 inches or more, with no upper size limit. Their widths and radial cross-sections typically adhere to standard inch or metric measurements. SPS Seals can be provided as either split or endless, allowing for on-site splitting, and can be equipped with lubrication ports as needed.

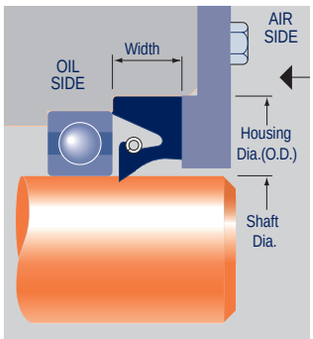

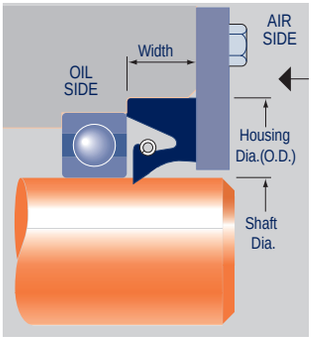

OPERATING CONDITIONS

- **Temperature Range:**
  Nitrile: -40 to +100 degrees Celsius
  Viton: -40 to +240 degrees Celsius
- **Maximum Pressure:** 10 p.s.i.
- **Maximum Shaft Speed:** 3500 feet per minute

For split SPS seals, it is advisable to secure them with a suitable plate, as shown in the diagrams. Whenever possible, position the split at the uppermost point, ensuring that the spring joint does not align with the seal split. Additionally, make certain that the splits in the retainer plate do not coincide with the seal split. For ease of assembly, it is often feasible to butt joint the seal ends on-site before fitting the garter spring. If needed, a suitable adhesive from Barnwell can be provided upon request. Be cautious not to interfere with the spring or the sealing lip, and it is recommended to pre-lubricate the seal during installation.

COMMON APPLICATIONS

SPS Seals are an ideal choice for large-diameter rotating equipment where accessing the seal is challenging or where minimising costly downtime is critical. Applications include marine drive shafts, rolling mill equipment, and gearboxes used in mining, quarrying, and off-highway scenarios.

AVAILABLE MATERIALS

SPS Seals are available in solid Nitrile rubber, fabric-reinforced rubber, or solid Viton. The standard garter springs are crafted from high carbon spring steel, with options for stainless steel and phosphor bronze springs for marine applications. Non-clogging spring covers can also be supplied for specific critical applications, ensuring their reliability in various situations.

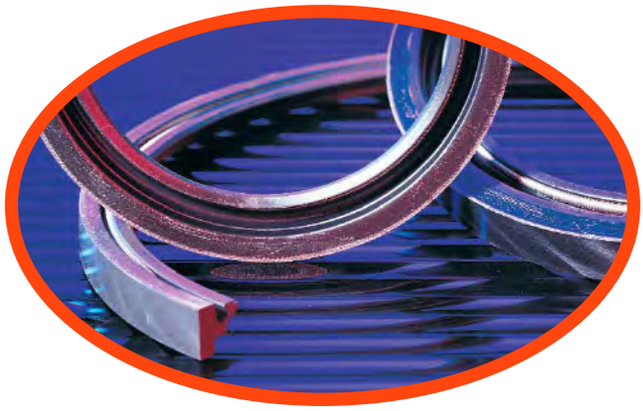

Automotive/Hub Seals

The automotive industry is the largest global market for fluid sealing components, especially rotary shaft seals. Consequently, most seal manufacturers offer solutions tailored to common applications, such as engine and transmission seals in passenger cars.

However, the truck and bus sector has distinct requirements, particularly in wheel seals. These applications demand extended mileage intervals between bearing and brake overhauls. To address this challenge, unitised hub seals have become essential, especially for modern trailer fleets. We offer six variations, each requiring specialised installation tools. While these seals are typically made from Nitrile material and come in inch sizes, there is a growing demand for Viton material and metric sizes to cater to evolving needs in this sector.

ALTERNATIVE STYLES IN COMMON USE

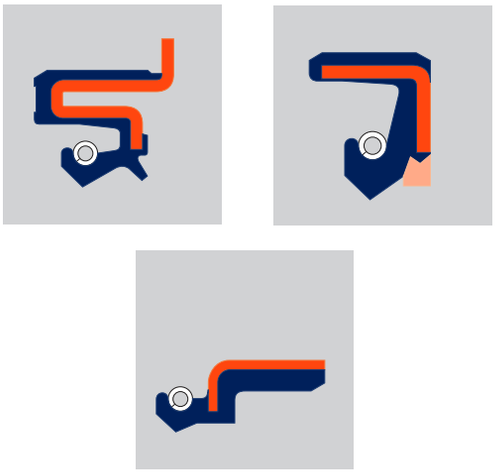

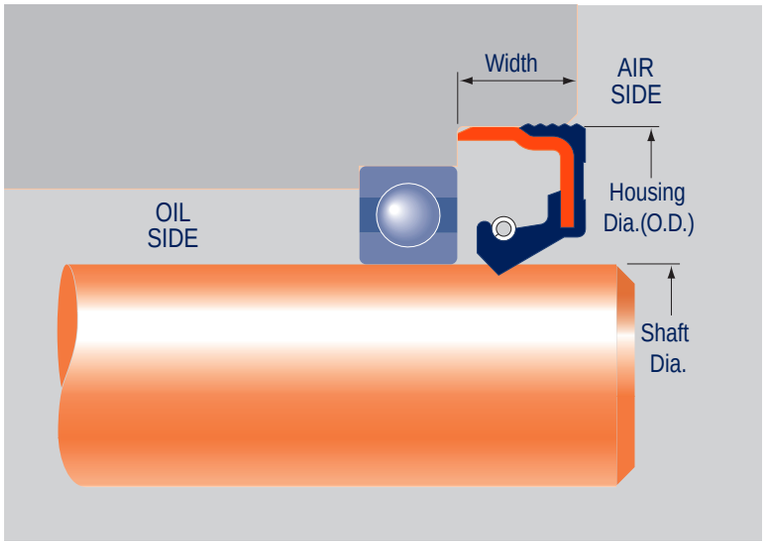

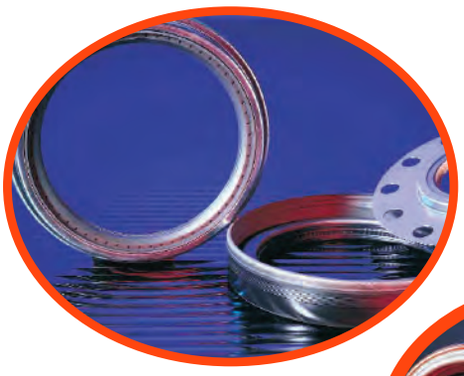

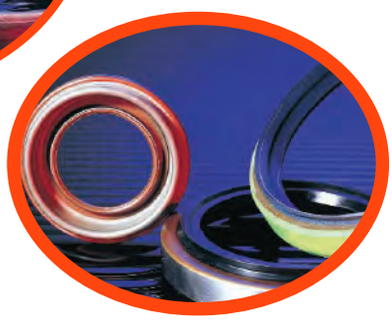

BENEFITS OF AUTOMOTIVE/HUB SEALS:

- Enhanced Mileage Interval: These seals are designed to withstand high mileage intervals between bearing and brake overhauls, reducing mainte nance requirements.
- Reduced Downtime: By extending mileage intervals, these seals help minimise costly downtime, making them valuable for fleet management.
- Specialised Design: They are tailored to meet the unique needs of the truck and bus sector, particularly in wheel seal applications.
- Unitised Hub Seals: Unitised hub seals have become essential for modern trailer fleets, improving overall efficiency.
- Specialised Installation Tools: The availability of specialised installation tools ensures proper fitting and performance.

Automotive/Hub Seals

(Bus, Truck, and Trailer)

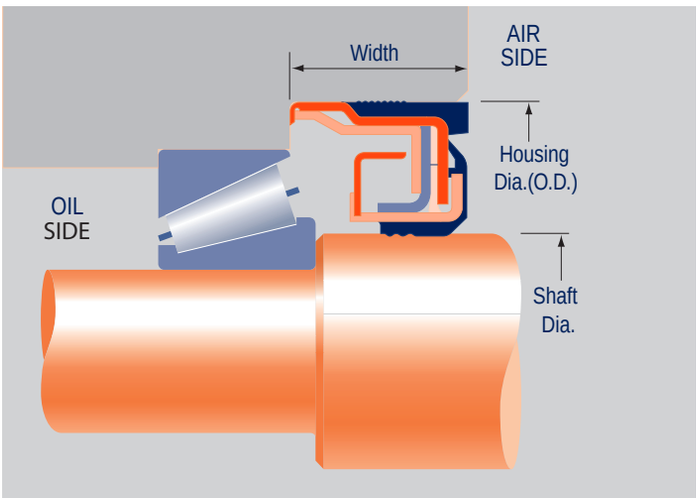

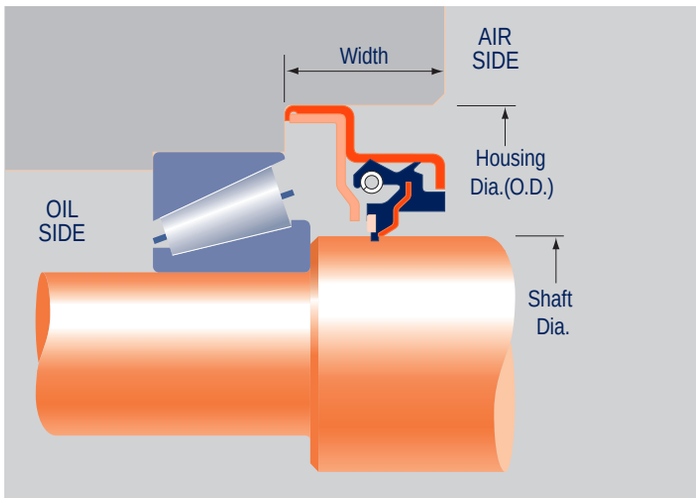

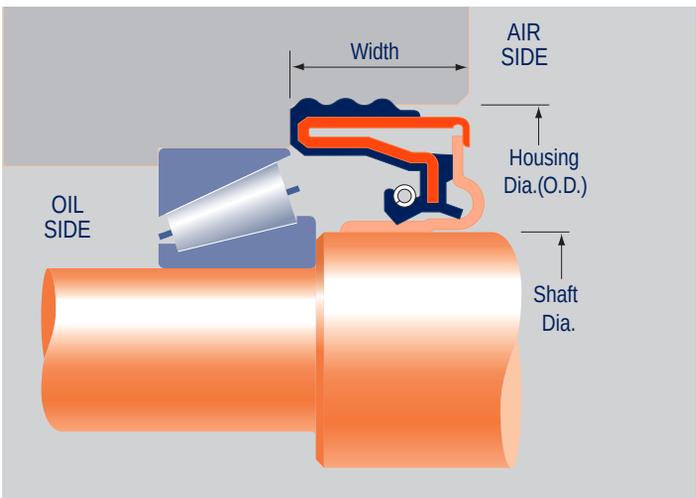

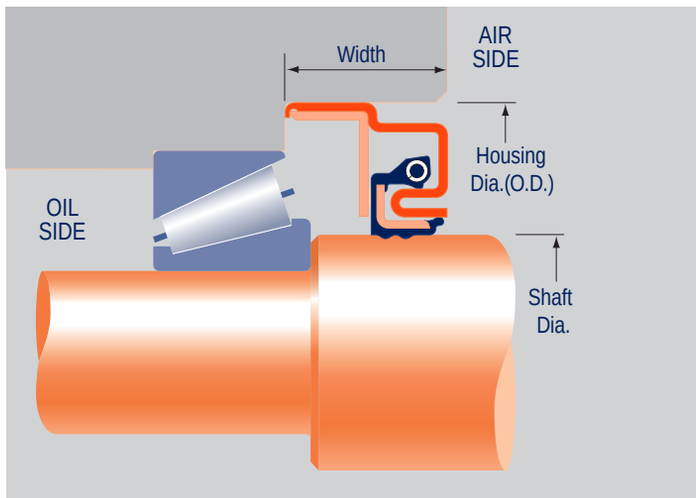

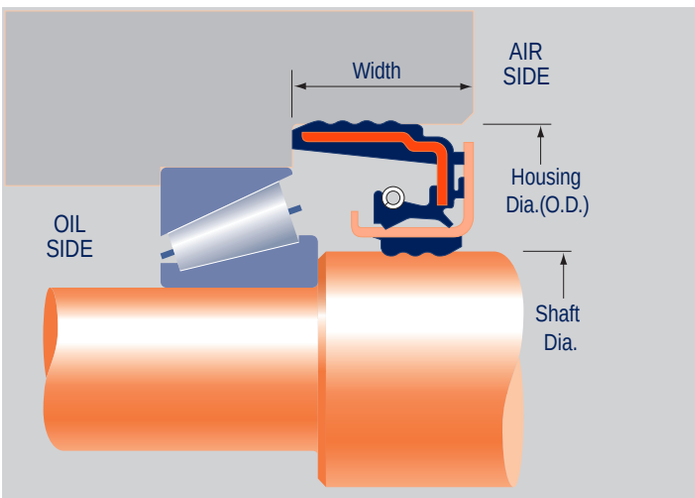

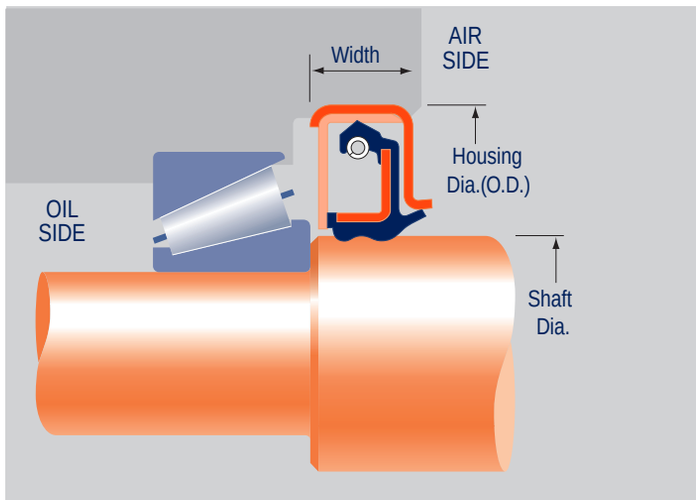

V Seals

This entirely rubber seal is typically stretched onto a rotating shaft. Differing from the previously discussed radial shaft seals, this one is categorised as an axial seal. While it can serve as the main seal for grease or oil, its more common role is as a secondary seal, tasked with blocking the entry of dirt, dust, or water. Multiple styles are at your disposal, with the most popular ones featured here.

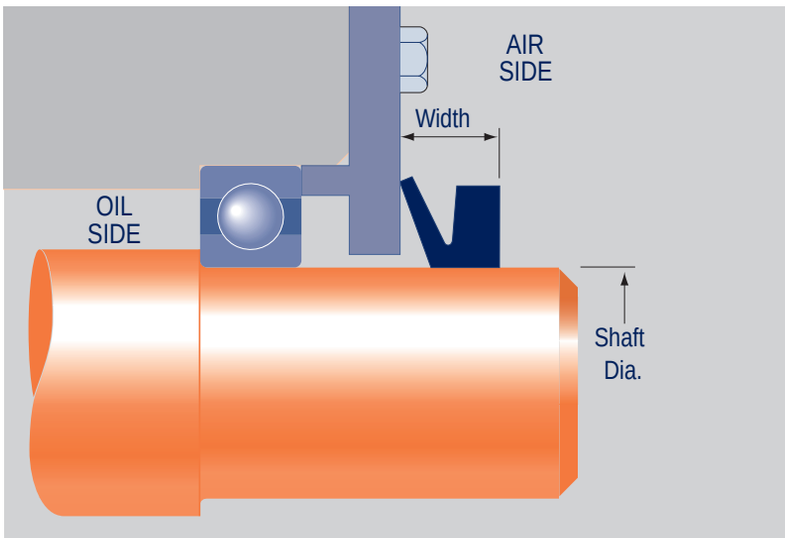

ALTERNATIVE STYLES IN COMMON USE

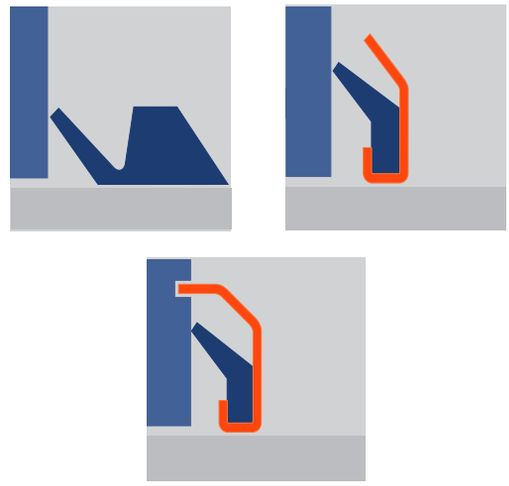

SIZE RANGE:

Shaft dias. 0.125” to 78” imp. range
3mm to 2000mm metric range

PRESSURE RATING:

Nil

SHAFT SPEED:

2400 ft/min. (12m/sec)

MATERIALS AVAILABLE:

Nitrile and Viton

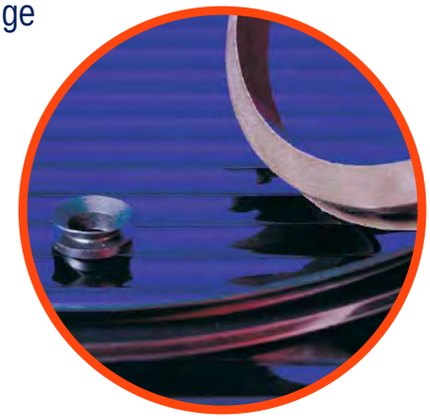

BENEFITS OF TYPE B SEALS:

- Durability: These seals are known for their durability and longevity, even in challenging conditions.
- Resistance: They exhibit resistance to wear, abrasion, and chemical exposure, enhancing their lifespan and performance.
- Wide Temperature Range: V-seals can withstand a broad temperature range, making them suitable for diverse environments.
- Easy Installation: They are relatively easy to install, ensuring a quick and hassle-free sealing solution.
- Cost-Effective: V-seals are cost-effective and offer reliable sealing performance, reducing maintenance and replacement costs.

Miscellaneous Seals and Arrangements

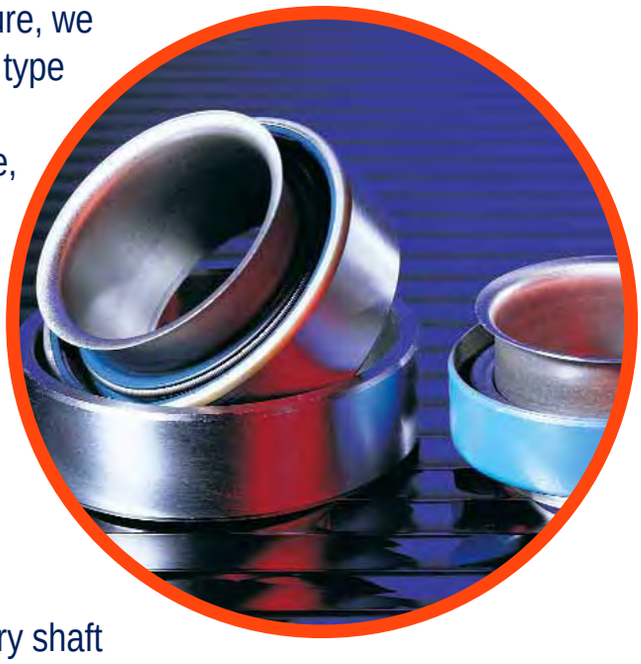

Apart from the standard items showcased in this brochure, we have the capability to promptly supply virtually any seal type or size to meet industry requirements. When modern high-volume manufacturing processes are cost-effective, we can expedite the design and production of seals suitable for a wide array of applications, spanning the automotive, industrial, marine, and agricultural sectors.

For the automotive sector, we offer unitised hub seals, crank and cam-shaft seals, water pump seals, gaskets, and shaft repair kits.

In the industrial domain, we provide non-standard rotary shaft seals, split-seals, V-Seals, heavy-duty face seals, mechanical face seals, 'O' Rings, rubber sheets, and cords.

For marine applications, we offer brass-cased seals, stainless steel or phosphor bronze sprung seals, and all-rubber seals.

In the agricultural field, we supply external seals, leather seals, and sealing kits.

Additionally, our inventory includes sealants, circlips, sealing washers, hydraulic and pneumatic seals, ensuring a comprehensive range of sealing solutions to cater to diverse needs.

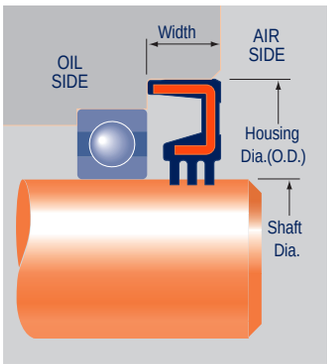

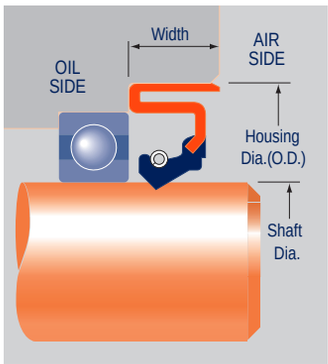

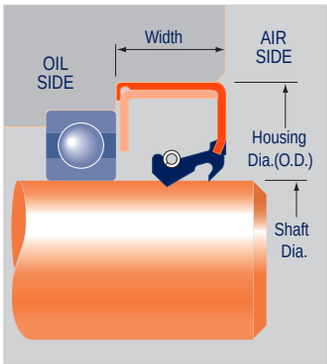

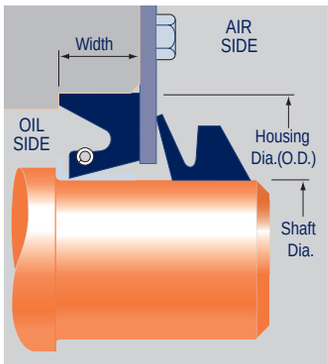

Mechanical Face Seals

We offer a variety of Heavy-Duty Face Seals, which are particularly favored by off-road crawler machines. There are two versions to choose from: the straight bore HDDF and the Caterpillar-type Duo-Cone. We maintain stock of the most popular sizes, and a comprehensive range can be swiftly sourced upon request.

Additionally, we provide "general-purpose" mechanical face seals, commonly employed in a broad spectrum of pump applications. These seals are specifically suitable for use with automotive water pumps.

BENEFITS OF MECHANICAL FACE SEALS:

- Effective in Harsh Conditions: These seals are effective in extreme conditions, including high pressures, high speeds, and temperature variations.

- Reduced Lubrication Requirements: Mechanical face seals often require less lubrication, minimising the risk of contamination and the need for frequent relubrication.

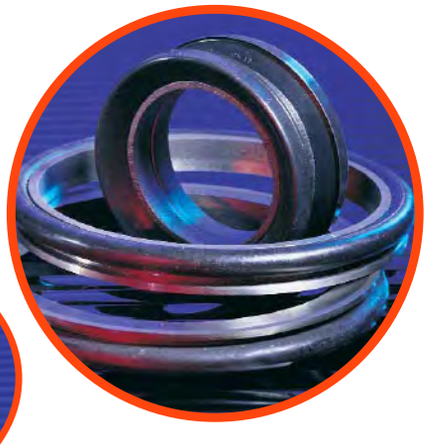

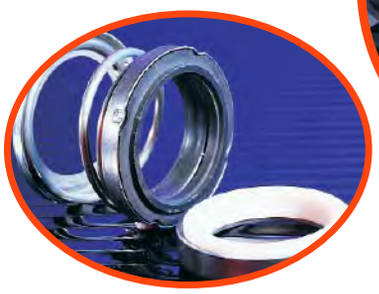

Gland Packing

We maintain an inventory of soft packings and gland packings suitable for a wide range of pump and valve applications. In light of the environmental concerns surrounding asbestos, there's a growing focus on exploring alternative packing materials.

We collaborate with one of the world's foremost manufacturers in this field, enabling us not only to fulfill your present packing needs but also to offer guidance on forthcoming advancements in this crucial industry.

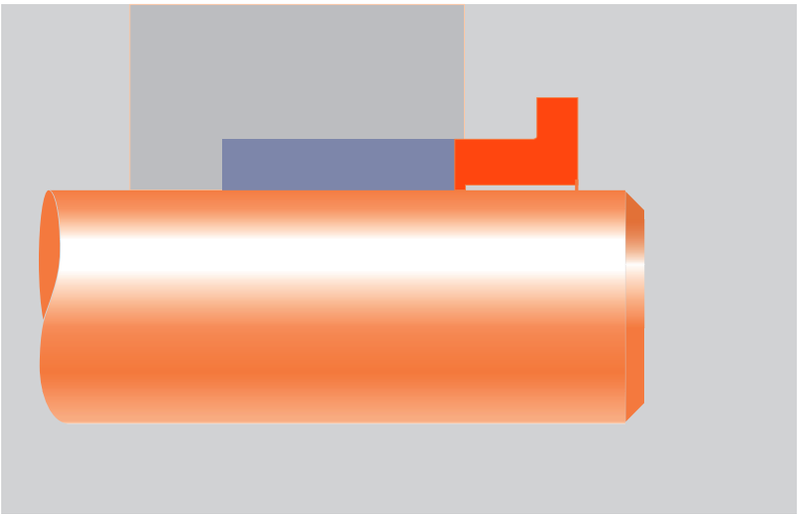

FLUID SEALING SPECIALISTS FOR OVER 50 YEARS | £5.1 MILLION INVENTORY

HQ & CENTRAL WAREHOUSE
80 Reginald Road
Smethwick
Birmingham
West Midlands
B67 5AS
Tel +44 (0)121 429 8011
Fax +44 (0)121 434 3016
sales@barnwell.co.uk

BRISTOL
Unit 5 Windmill Business Park
Windmill Road
Clevedon
Bristol
BS21 6SR
Tel +44 (0)117 982 5245
bristol@barnwell.co.uk

DARTFORD
Unit 7 Schooner Park
Crossways Business Park
Dartford
Kent
DA2 6NW
Tel +44 (0)1322 293 024
Fax +44 (0)1322 272 099
dartford@barnwell.co.uk

GLASGOW
14-16 Murray Place
Righead Industrial Estate
Bellshill
Lanarkshire
ML4 3LP
Tel +44 (0)1698 749 666
Fax +44 (0)1698 749 888
scotland@barnwell.co.uk

MANCHESTER
Unit 36/37 Westbrook Trading Estate
Westbrook Road
Trafford Park
Manchester
M17 1AY
Tel +44 (0)161 888 2330
Fax +44 (0)161 888 2296
manchester@barnwell.co.uk

EXPORT
80 Reginald Road
Smethwick
West Midlands
B67 5AS
Tel +44 (0)121 429 8011
Fax +44 (0)121 434 3016
export@barnwell.co.uk